G3-19715-0110

Messrs :

Authorized Signature (Customer)

3TNV76-XCYI2D

for Industry (Dressing Model)

SPECIFICATIONS & DRAWINGS FOR MASS PRODUCTION

17.Jan.2019

YANMAR CO.,LTD.

This information or drawing is the exclusive property of YANMAR Corporation without their consent it may not be reproduced or given to any third parties.

★

G3-19715-0110

Contents

Drawing No.	Part No.	Name	Qty.	Remarks
B3-19715-0090		Outline		
E3-19E17-0010		Wiring Diagram		
Z3-19717-0030		Detail of Flywheel		
G3-19715-0130		Performance Curve		
G3-19715-0120		Scope of Supply		
G3-19715-0230		Option Parts List		
		LOOSE PARTS		
	114220-07130	FIX LABEL, HOT SURFACE	1	
	119515-13200	GASKET, SILENCER	1	
	129335-55750	SEPARATOR ASSY,WATER	1	
	119643-66900	DIODE	1	
	119650-77911	RELAY ASSY, GLOW	1	
	129211-77920	TIMER, SECTION 1	1	
	0ATNV-EN0015	OPERATION MANUAL	1	

Note :

1.Since the durability of electric parts basically apply to R2 level of JIS D0203,please inform the customer not to clean with steam or high pressure water.
2.Electric parts should not mounted on the engine directly (relay, timer etc.) must be kept free from wet & high humidity and be kept with good air ventilation. Regarding the vibration of the electrical components, these vibration level must be kept less than 4G.
3.The engine with EGR valve has the possibility of corrosion problem on engine cylinder liner or other parts by high sulfur fuel, therefore, please do not sell and use the engine with EGR valve in other than the emission regulated area where it meets the following requirement.
(There is a fuel regulations that the sulfur content of the fuel is provided for 1000ppm or less, and the certified fuel must be used. The areas that we could confirm at present are shown in Reference No. ISB-14-04)

Engine Development Dept.

Manager: T. Sasaki

Sec.Manager: K. Miyazaki

	For Conference	For Apporval	For Installation	Final Drawing
Customer				
Branch				
Exp.Dept.				
Copy				
Total				

Checked: K. Miyazaki

Drawn: Taguchi

Messrs :	W.No.	3TNV76-XCYI2D

★

Contents

G3-19715-0110

Drawing No.	Part No.	Name	Qty.	Remarks
		REFERENCE DRAWING		
	114250-39450	SWITCH,OIL PRESS.0.5	1	
	121250-44901	SWITCH, THERMO 110	1	
	129630-77910	SOLENOID, FUEL CUT	1	
	119717-77010	STARTER, P1.1	1	
	See option parts list	ALTERNATOR		
	119717-77801	PLUG, GLOW	3	
	119717-77820	CONNECTOR, GLOW PLUG	1	

Messrs :	W.No.	3TNV76-XCYI2D

★

ENGINE SPECIFICATIONS

G3-19715-0110

No	Model name			3TNV76-XCYI2D	Remarks
1	Type			4 cycle, Inline,Water-cooled Diesel	
2	No.of cylinders-Bore×Stroke		mm	3-φ76×82	
3	Combustion system			Indirect Injection	
4	Compression ratio			23.5	
5	Displacement		cc	1,116	
6	Rated output		kW(PS)	16.9(23)	
			min^{-1}	3200	
7	Gross output		kW(PS)	18.5(25.2)	
			min^{-1}	3200	
8	Intermediate torque		N▪m	60.9～66.6	
			min^{-1}	2000(+-100/100)	
9	Low speed torque		N▪m	～	
			min^{-1}		
10	Specific fuel consumption		g/kW-h(g/PS-h)	277(204)	at rated output
11	Ambient condition			25℃、100kPa、30%	
12	Engine speed at no load	Max.	min^{-1}	3415	+25/-25
		Min.	min^{-1}	1000	+25/-25
13	Governorbility	Governor type		centrifugal-all speed governor	
		Temporary	%	max.12	load
		Permanent	%	max.6	100%
		Recovery time	sec	max.6	↓
		Stability	min^{-1}	max.30	0%
14	Gradients	Longitudinal	deg	30(25)	intermitted
		Lateral	deg	30(25)	( ) : continuous
15	Firing order			1-3-2-1	order from F.W.
16	Direction of rotation			counterclockwise	viewed from F.W.
17	Engine dry weight		kg	approx.148	
18	Fuel injection timing		deg	FID19(+1/-1)	
19	Fuel system	Fuel type		Diesel Fuel	
		Fuel injection pump		In-line(Yanmar ML)	
		Fuel injection nozzle		throttle type	
		Fuel filter		paper element	
20	Lubrication system	System		forced feed	
		Oil grade		API class CD, SAE grade 10W30	
		Oil pump		trochoid pump	
		Oil filter		paper element	
		Oil capacity	liter	3.4	max.
			liter	1.6	effective.
		Oil pressure	MPa	0.34	at rated output
21	Cooling system	Heat exchanger		See option parts list	Standard : without radiator
		Pressure cap	kPa	88 (recommend)	
		Fan		See option parts list	Standard:7-φ335
		Coolant capacity	liter	0.9	

3TNV76-XCYI2D

★

ENGINE SPECIFICATIONS

G3-19715-0110

No	Model name		3TNV76-XCYI2D		Remarks
22	Air cleaner			See option parts list	Standard : without air cleaner
23	Breather system			closed type	
24	Muffler			See option parts list	Standard : without silencer
25	Starting system	Starter		12V-1.1kW	
		Battery		55B24	
		Starting aid		glow plug(super quick glow)	
26	Generator			See option parts list	Standard : 12V-40A with P-terminal
27	Engine color			Black	
28	Applied regulation			EU-STAGE5	

＜Career＞

Messrs :	W.No.	3TNV76-XCYI2D

★

Notes

G3-19715-0110

Notes of Engine Lifter

1	If engine lifting eyes are loosen or damaged during operation, it will be very dangerous that engine may fall when lifting. Please confirm surely lifting eyes are in good condition which has no looseness, no damage or no rust before lifting engine.
2	Yanmar installed lifting eyes are designed for lifting only bare engine. If you use Yanmar installed lifting eyes for engines with accessories such as clutch housing or hydraulic pump attached, lifting eyes may be broken and lead to engine fall. Do not apply such a very dangerous usage.

Messrs :	W.No.	3TNV76-XCYI2D

★

The engine operating environment and driven machine conditions must be studied carefully when selecting an engine in order to make the most of the engine performance, extend the service life and improve the machine capacity.

This manual describes the items that must be considered when selecting an engine and determining the specifications to ensure that the engine is not used beyond its capacity.

APPLICATION STANDARD

No.	Item	Application Standard			Remarks
1	Engine type	Special swirl combustion chamber system engines (IDI engines)		Engines with cylinder bore of 76 mm or less	TNV series
		Direct injection system engines (DI engines)		Engines with cylinder bore of 82 mm or more	
2	Output/rpm	Output rpm		See *Specifications on page 3-5.* Engine Specifications	
		Output Setting conditions	Ambient temperature	25°C (77°F)	Same as in JIS and ISO
			Atmospheric pressure	100 kPa (750 mmHg)	
			Relative humidity	30%	
		Output power correction		See *Power Corrections on page 4-3.*	
3	Special operating environment	Precautions against sand dust		See *Special Operating Environment on page 1-5.*	
		Precautions for outdoor installation			
		Precautions against sea air and snow melting agents			
		Precautions against cold environment			
		Precautions against hot environment			
4	Fuel oil	Fuel oil	Ambient temperature °C (°F)	Equivalent fuel	See *Standard Diesel Fuel Line Layout on page 10-7* for the fuel specifications in each country.
		Diesel fuel	≥ -5 (23)	JIS No. 2	
			15 to -20 (59 to -4)	JIS No. 3	
			<-20 (<-4)	JIS special No. 3	
		Kerosene	Not allowed		
		Heavy oil	Not allowed		
		JP-4	Not allowed		
		JP-8, JP-5	Contact Yanmar for consideration		
5	Engine oil	See *Engine oil on page 11-5.*			The initial replacement of the lubricating oil and lubricating oil filter should be done at 50 hours of service.
		Lubricating oil class	Lubricating oil replacement interval (hr)	Lubricating oil filter replacement interval (hr)	
		CD, CF, CF-4, CI-4 E-3, E-4, E-5, DH-1	Every 250	Every 250	
		Allowable maximum engine oil temperature	≤120°C (248°F)		At the specified maximum ambient temperature.
6	Engine coolant	Allowable cooling water temperature at engine outlet	≤105°C (221°F)	See *Cooling System on page 9-1.*	
		Water quality	Soft water		See *Engine Coolant on page 9-4.*
		Antifreeze mixing ratio%	Atmospheric temperature °C (°F)		See *Radiator on page 9-8.*
		30	0 to -15 (32 to 5)		
		40	-15 to -25 (5 to -13)		
		50	-25 to -40 (-3 to -40)		

No.	Item	Application Standard				Remarks
7	Power take-off (PTO)	See *P.T.O. Systems on page 15-1*.				
8	Low-temperature startability	See *Low-temperature startability on page 1-7*.				
9	Allowable inclination angle	Continuous operation	All directions	IDI	≤25°	See *Crankcase Breather System on page 11-18*.
				DI	≤30°	
		Instantaneous operation (within 3 minutes)	All directions	IDI	≤30°	
				DI	≤35°	
10	Allowable exhaust back pressure	See *Allowable Air Intake Restriction and Exhaust Back Pressures on page 1-30*.				
11	Allowable air restriction at intake manifold					

SPECIAL OPERATING ENVIRONMENT

The engine performance depends greatly on the operating and environmental conditions.

Please consult with Yanmar when unusual operating conditions exist.

Precautions Against Dusty Conditions

Condition	Part	Countermeasure
Wear due to dusty or sandy condition	Air cleaner	The following measures and cleaning are necessary to prevent dust from entering the engine: Use double element (safety element) Use evacuator valve Use dust indicator
	Alternator	Dust-proof type may be required for preventing entry of sand and dust.
	Starting motor	
	Breather air reservoir (for turbocharged engine only)	Since dust can enter from the breather pipe while the engine is stopped, an air reservoir may be installed at the end of the breather pipe.
	Cooling fan	to improve the wear resistance, a fan made of nylon 6 (reinforced with glass fiber) or steel may be required.
	V pulley	To improve the wear resistance, a hardened pulley may be required.
	V-belt	To counteract belt wear, a larger type V-belt may be required.
	Radiator	Changing the core type and fin material may be required. Heat balance check after the modification is required.

Precautions for Outdoor Installation

Condition	Part	Countermeasure
Rain, snow, etc.	Rain cap (for both air cleaner and exhaust silencer)	Entry of rainwater, snow, etc. must be prevented.
	Electrical parts	Since electrical parts correspond to level R2(*) in JIS D 0203, either install them where they will not be splashed with water, or provide covers.
Location	----------	Flat, well-ventilated place

(*) Level R2: A water spraying test level for checking the performance of the portion subject to indirect exposure to rainwater or splashing water.

Precautions Against Salty Conditions (Air, Sea Water, Road Salt)

Condition	Part	Countermeasure
Location exposed to salt air or road salt	Electrical parts	Since corrosion may occur, careful maintenance is necessary.
	Speed control lever shaft	
	Stop lever shaft	
	Exhaust manifold bolts	
	Stop lever return spring	
	Radiator	
Location where salt water may splash directly onto the engine	----------	Do not install engine where it can be splashed with salt water.

Precautions Against Cold Environment

Environmental temperature	Part	Countermeasure	Remarks
-30°C (-22°F) or above	Battery (high CCA)	Specification must be changed.	See *Low-temperature startability on page 1-7* for startability.
	Starting motor		
-30°C to -40°C (-22°F to -40°F)	Cooling water hose	Special rubber may be required to prevent rubber parts from being damaged by hardening. Choose components that will maintain flexibility at this temperature range.	
	Intake air hose		
	O-rings		
	Oil seal		
	Fuel hose		
	Fuel feed pump	An electric feed pump is required.	
	Starting aid	A block heater should be used.	
-40°C (-40°F) or below		Not recommended.	

Precautions Against Hot Environment

Environmental temperature	Part	Countermeasure
Below 40°C (104°F)	Electrical parts	The temperature inside the engine hood must be kept below 80°C (176°F) to protect the electrical parts. Provide ventilation around electrical parts.
Above 40°C (104°F)	Radiator	A large capacity radiator and fan must be used to prevent the cooling water and lubricating oil temperatures from getting too hot.
	Cooling fan	
	Oil cooler	Increase capacity or install as standard equipment.
	Electrical parts	The temperature inside the engine hood must be kept below 80°C (176°F) to protect the electrical parts. Provide ventilation around electrical parts.

Others

Condition	Part	Countermeasure
Location where explosive, flammable or toxic gas exists	----------	Engine is not designed for installation where explosive, flammable or toxic gas exists.

STANDARD DIESEL FUEL LINE LAYOUT

There are two typical diesel fuel line layouts for TNV engines. Fuel line layout shown in **(Figure 10-4)** is for IDI engines and **(Figure 10-5)** is for DI engines.

Layout for IDI Engines with ML Type Diesel Fuel Injection Pump

Diesel Fuel Line Layout for IDI Engines

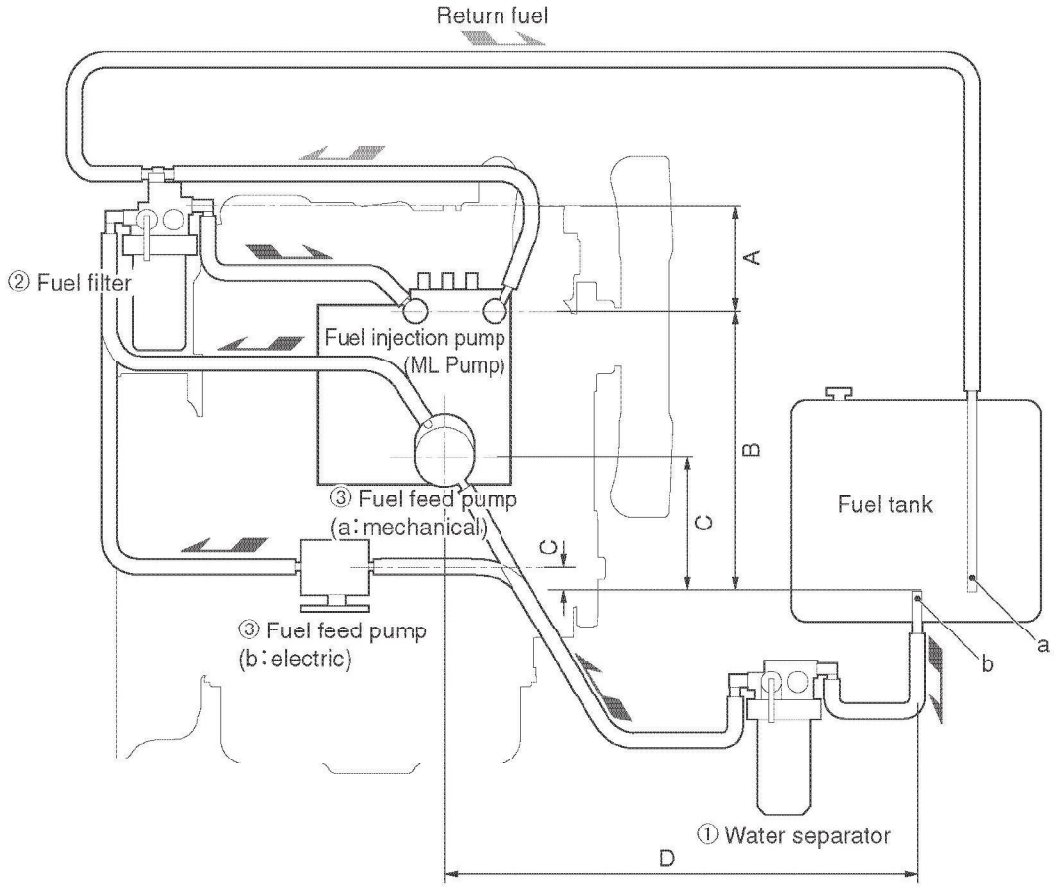

Figure 10-4

Note: Keep return line (a) away from diesel fuel outlet (b) to prevent the diesel fuel line from drawing in air and / or hot diesel fuel. NEVER connect return line (a) to the inlet line.

Diesel Fuel System Part Names and Functions for IDI Engines

No.	Part name	Function
(1)	Diesel fuel prefilter / water separator	A diesel fuel filter / water separator is mandatory for TNV engines to separate water from diesel fuel with a 100 mesh element and to prevent water from getting into the fuel injection pump and causing damage. 100 mesh or 25 to 50 μm is required for the element. When replacing or cleaning the diesel fuel filter / water separator element or diesel fuel filter, use the valve on the diesel fuel filter / water separator to shut off the fuel supply. (same as TNE engine)
(2)	Diesel fuel final filter	Has 8 μm mesh paper element inside. (same as TNE engine) There is a valve on the inlet of the diesel fuel filter for air bleeding
(3)	Diesel fuel pump	Sends diesel fuel to the diesel fuel injection pump from the fuel tank. Diesel fuel pumps are either mechanical or electrical.
	(a) Mechanical	Has a diaphragm and is installed on the diesel fuel injection pump. (same as TNE engine)
	(b) Electric	Has a solenoid and is installed outside the engine. (same as TNE engine)

Layout Dimension for IDI Engines

Position	Standard value	Content
A	50 ~ 150 mm	From diesel fuel filter outlet to diesel fuel injection pump inlet For air bleeding, diesel fuel filter outlet position should be higher than the diesel fuel injection pump inlet position.
B	≤1000 mm	Total head of diesel fuel pump (from fuel tank outlet to injection pump inlet)
C	(a) Mechanical feed pump: ≤500 mm (b) Electric feed pump: ≤400 mm	Suction head in dry condition (from fuel outlet of tank to feed pump inlet)
D	≤2000 mm	Suppression of the suction side resistance of the fuel feed pump (from diesel fuel tank outlet to diesel feed pump inlet)

Parts Specification for IDI Engines

Engine model	2TNV70 ~ 3TNV76	
Diesel fuel pump	(a) Mechanical type	:129100-52100
	(b) Electric type	:119225-52102 (standard) 129612-52100 (with water proof coupler)
Diesel fuel / water separator	129335-55700 (diesel fuel inlet downward) 121257-55700 (diesel fuel inlet upward) Filter mesh: 100 mesh (with valve)	

Fuel Filter for IDI Engines

Filter body:	119833-55620 (diesel fuel outlet downward) 119740-55600 (diesel fuel outlet sideways)
Filter element :	119810-55650
Filter mesh :	8 μm
Filtration size:	432 cm^2
For poor quality fuel :	Filter mesh: 5 μm

Contact Yanmar with questions

NEED	○	·	PURCHASING SPECIFICATION	·	REQUEST FOR APPROVAL	·	DELIVERY DRAWING	·	INSPECTING STANDARD	·	QC-PROCESS

FILE NAME:3TNV76-XCY12.DRW

3RD ANGLE PROJECTION

FIGURE DIMENSION | GT.CODE

○ AND ⌭:RADIAL

CAREER

(2017.12.25)
REGISTERED BY YDSTX-17067.
REV.1(2019.1.17)
PAGE 2/2 IS ADDED.
(YDSTX-19005)

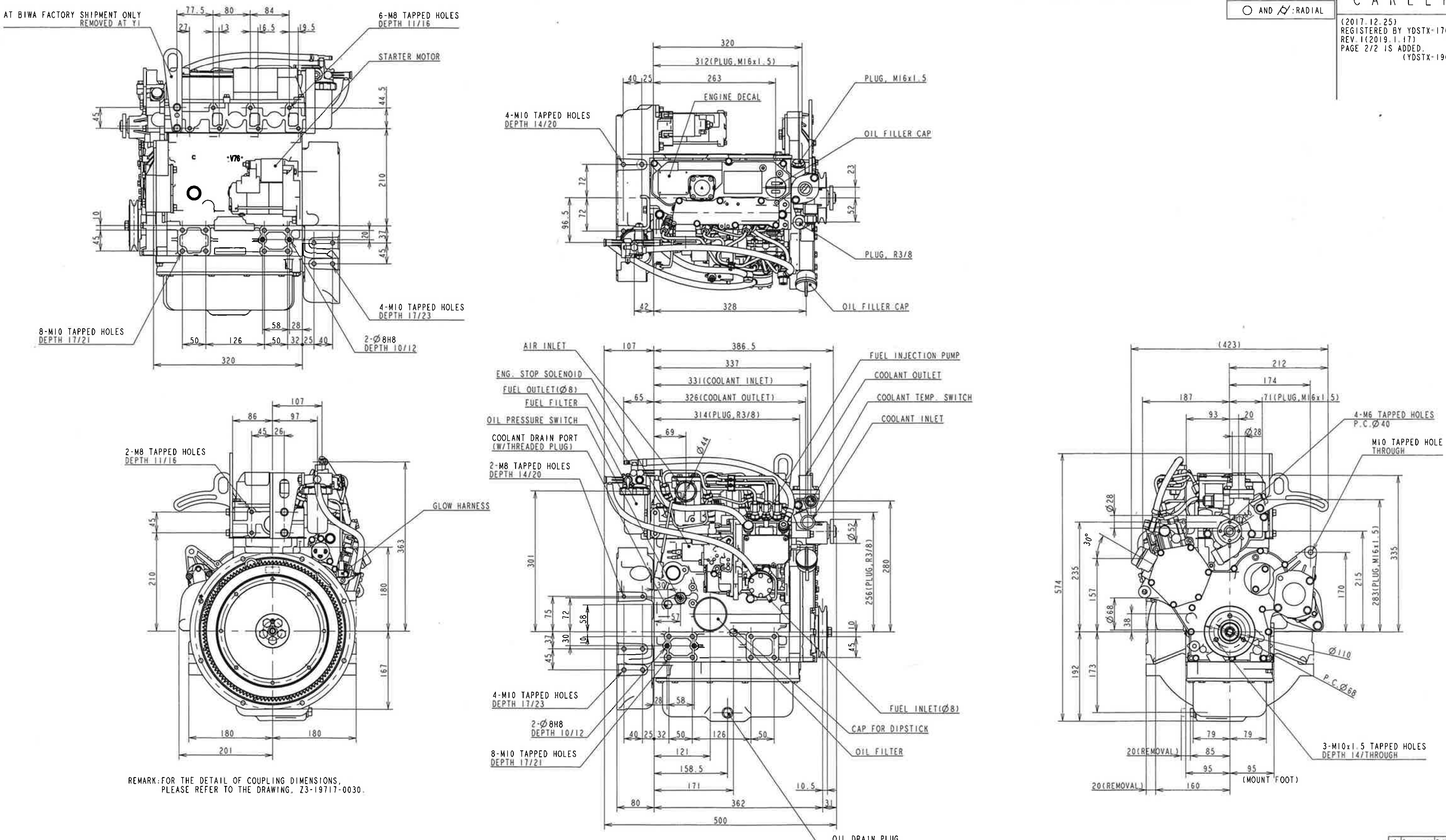

REMARK:FOR THE DETAIL OF COUPLING DIMENSIONS,
PLEASE REFER TO THE DRAWING, Z3-19717-0030.

With respect to the use of environmentally hazardous substances for the parts, the substances in use shall conform to the requirement specified in YIS V-0001J, "Restrictions of use for Environmentally Hazardous Substances".

本部品への環境負荷物質の使用に関しては YIS V-0001J(環境負荷物質の使用制限)の規定を満足すること。

3D-CAD

NOTICE		
KIND OF TOLERANCE	GEOMETRICAL TOLERANCE	SYMBOL
FORM	STRAIGHTNESS TOLERANCE	—
	CIRCULARITY TOLERANCE	○
	PROFILE OF LINE TOLERANCE	⌒
	FLATNESS TOLERANCE	▱
	CYLINDRICITY TOLERANCE	⌭
	PROFILE TOLERANCE OF SURFACE	⌓
ORIENTATION	PARALLELISM TOLERANCE	//
	PERPENDICULARITY TOLERANCE	⊥
	ANGULARITY TOLERANCE	∠
LOCATION	POSITIONAL TOLERANCE	⌖
	CONCENTRICITY OR COAXIALITY TOLERANCE	◎
	SYMMETRY TOLERANCE	⌯
RUN-OUT	CIRCULAR RUN-OUT TOLERANCE	↗
	TOTAL RUN-OUT TOLERANCE	⌰

WEIGHT (RAW)	(± %) kg		C.MANAGER	S.MANAGER
WEIGHT (CALC.)	(± %)			T. Sato
S.ENGINEER	MANAGER	MODEL 3TNV76-XCY12	SCALE	1:4
CHECKED	SPECIALIST	QTY 1	MATERIAL	
T. Yu	S. Taguchi	クミタテカ゛イケイス゛		
DESIGNED	DRAWN	DATE:Y.M.D	NAME	OUTLINE(1/2)
S. Taguchi	H.NAKAGAWA	2017.12.25		

YANMAR
POWER SYSTEM OPERATIONS DIV., YANMAR CO., LTD.

CODE REV.1 B3-19715-0090 DRAW SIZE A1

NEED ○	PURCHASING SPECIFICATION	REQUEST FOR APPROVAL	DELIVERY DRAWING	INSPECTING STANDARD	QC-PROCESS

FILE NAME:3TNV76-XCY12.DRW

3RD ANGLE PROJECTION

FIGURE DIMENSION | GT.CODE | ○ AND ⌭:RADIAL

CAREER

REFER TO 1/2.

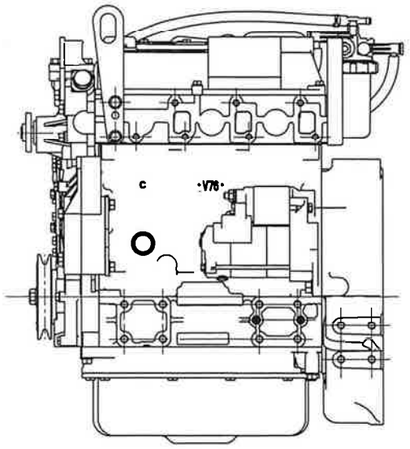

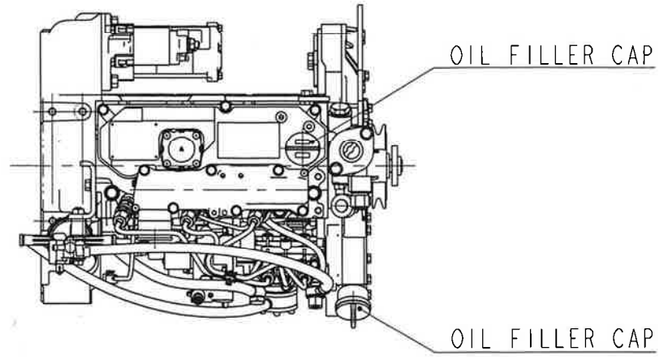

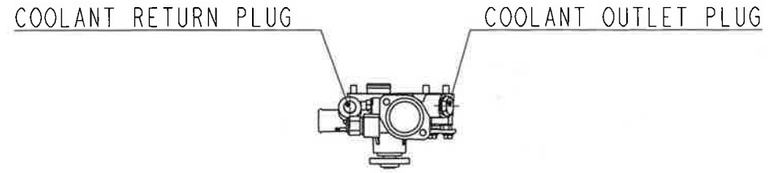

DETAIL OF COOLANT PUMP

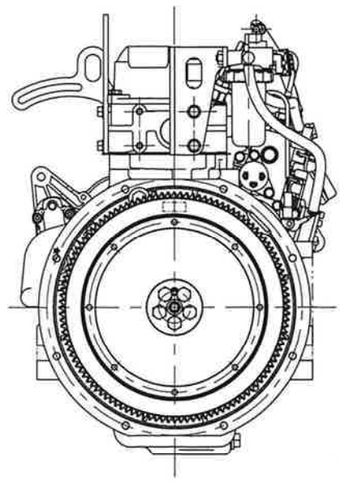

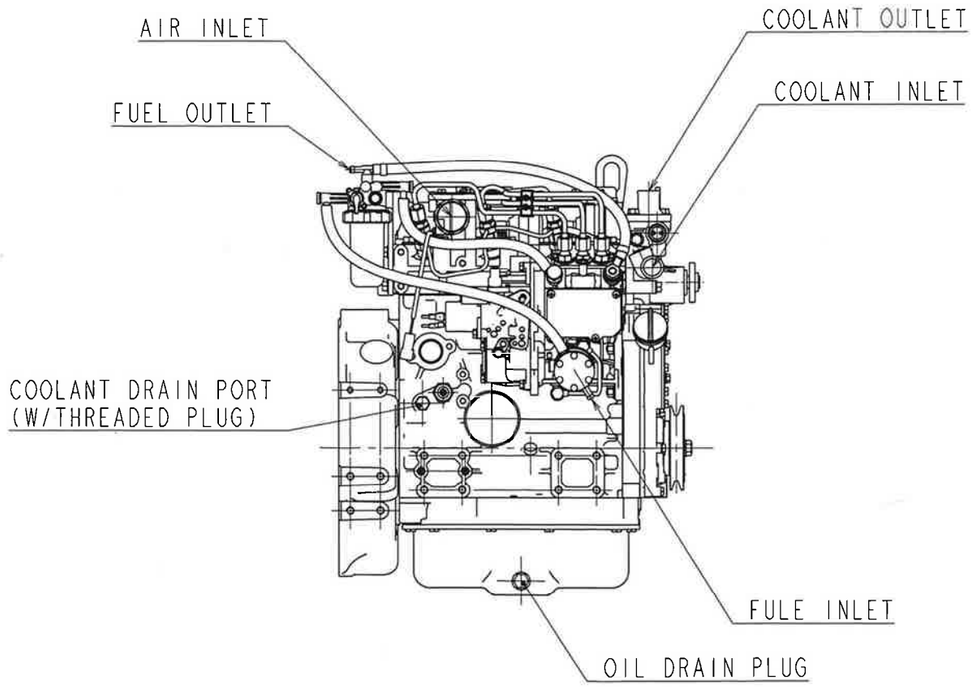

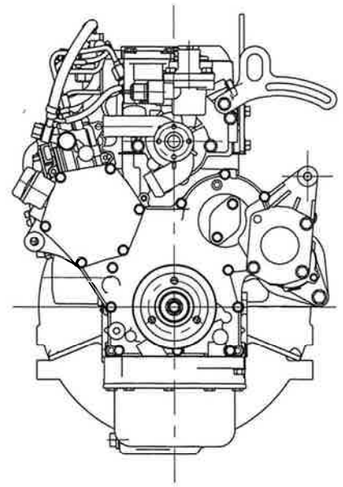

REMARKS
THIS DRAWING INDICATES COMPONENTS THAT MAY BE CONNECTED TO VEHICLE SIDE FOR FLUIDES.

With respect to the use of environmentally hazardous substances for the parts, the substances in use shall conform to the requirement specified in YIS V-0001J, "Restrictions of use for Environmentally Hazardous Substances".

本製品への環境有害物質の使用に関しては、YIS V-0001J(環境有害物質の使用制限)の規定を満足すること。

3D-CAD

NOTICE

GEOMETRICAL TOLERANCE		
FORM	KIND OF TOLERANCE	SYMBOL
	STRAIGHTNESS TOLERANCE	—
	CIRCULARITY TOLERANCE	○
	PROFILE OF LINE TOLERANCE	⌒
	FLATNESS TOLERANCE	⏥
	CYLINDRICITY TOLERANCE	⌭
	PROFILE OF SURFACE	⌓
ORIENTATION	PARALLELISM TOLERANCE	//
	PERPENDICULARITY TOLERANCE	⊥
	ANGULARITY TOLERANCE	∠
LOCATION	POSITIONAL TOLERANCE	⌖
	COAXIALITY OR CONCENTRICITY TOLERANCE	◎
	SYMMETRY TOLERANCE	⌯
RUN-OUT	CIRCULAR RUN-OUT TOLERANCE	↗
	TOTAL RUN-OUT TOLERANCE	⌰

WEIGHT (RAW)	kg (± %)			小形工開発部 C.MANAGER	S.MANAGER
WEIGHT (CALC.)	kg (± %)				
S.ENGINEER	MANAGER	MODEL	3TNV 76-XCY12	SCALE	1:4
CHECKED	SPECIALIST	QTY	1	MATERIAL	
			クミタテカ゛イケイス゛		
DESIGNED	DRAWN	DATE:Y.M.D	NAME	OUTLINE(2/2)	
	H.NAKAGAWA	2017.12.25			

YANMAR
POWER SYSTEM OPERATIONS DIV., YANMAR CO., LTD.

CODE | REV. | B3-19715-0090 | DRAW SIZE A1

要	○		購買仕様書				検査基準書		品質管理工程図		特別管理部品		量産初期安定管理部品

三角法
3RD ANGLE PROJECTION

形状寸法コード | G.T.CODE

真円度・円筒度八、半径法

図面来歴
CARFFR

ISSUE THE NEW DRAWING
(YDSTX-17057)

MARK	COLOR
B	Black
W	White
R	Red
L	Blue
G	Green
Y	Yellow
Br	Brown
Lg	Light Green
Sb	Sky blue
O	Orange
P	Pink
Gr	Gray
R/W	Red/White

	B	R1	R2	ACC	C	BR
PRE-HEATING	○	○		○		
OFF	○					
ON	○			○		○
START	○		○	○	○	○

KEY SW. DIAGRAM

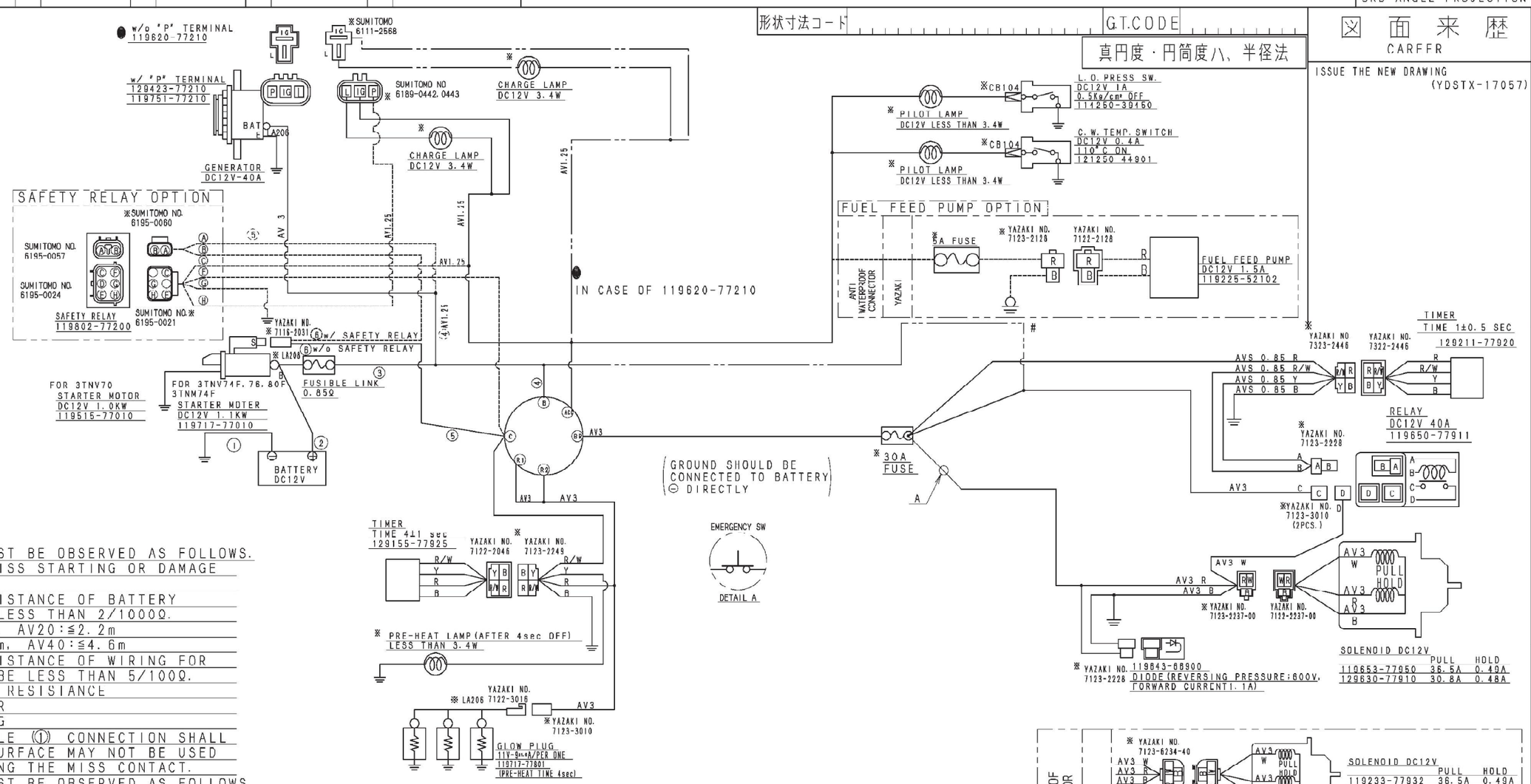

NOTES

1. WIRING OF STARTER MUST BE OBSERVED AS FOLLOWS. OTHERWISE IT CAUSES MISS STARTING OR DAMAGE OF STARTERMOTOR.
1-1. TOTAL ELECTRIC RESISTANCE OF BATTERY CABLE (①+②) SHOULD BE LESS THAN 2/1000Q.
REFERENCE: AV15:≦1.4m, AV20:≦2.2m
AV30:≦3.8m, AV40:≦4.6m
1-2. TOTAL ELECTRIC RESISTANCE OF WIRING FOR STARTER (③~⑥) SHOULD BE LESS THAN 5/100Q.
REFERENCE OF TERMINAL RESISTANCE
: 15/1000Q PER COUPLER
0Q PER SCREW SETTING
1-3. BATTERY GROUND CABLE (①) CONNECTION SHALL BE ENSURED. PAINTED SURFACE MAY NOT BE USED (FOR GROUNDING) AVOIDING THE MISS CONTACT.
2. BATTERY TREATMENT MUST BE OBSERVED AS FOLLOWS. OTHERWISE IT MAY CAUSE BURNING OF ELECTRIC EQUIPMENTS OR COMPONENTS. ALTERNATOR (DIODES) BURNING CAUSED BY BATTERY CABLE CONNECTION REVERSELY IS NOT WARRANTED.
2-1. BATTERY SHOULD BE FIXED BY FITTING. (NOT TO MOVE)
2-2. BATTERY CABLE LENGTH SHOULD BE ADJUSTED PROPERLY AND CLAMPED NOT TO BE CONNECTED REVERSELY.
2-3. DO NOT LOOSE THE BATTERY CABLE TERMINAL, NOR TURN THE BATTERY SWITCH OFF DURING THE ENGINE RUNNING.
3. ONLY THE SPECIFIED LOAD SHOULD BE APPLIED ON THE ALTERNATOR "L" AND "P" LINE. IT IS NOT ALLOWED TO CONNECT ANY LOAD UNSPECIFIED WITHOUT YANMAR APPROVAL.
4. CHECK ANY SURGE CURRENT OR VOLTAGE OCCURED UNDER NORMAL OPERATIONS AND EXPECTIVE ERRONEOUS OPERATIONS, AND CONFIRM THE CIRCUIT NO SURGE OCCURS. ESPECIALLY PROVIDE THE FLYWHEEL DIODE FOR "C-LOAD" AND DIODE FOR "L-LOAD".

REMARKS

1. ※ MARKED PARTS ARE NOT PROVIDED BY YANMAR.

NOTES FOR ENGINE STOP SOLENOID

1. PERMISSIBLE RESISTANCE OF SOLENOID CIRCUIT SHOULD BE LESS THAN 0.07Q TO GUARANTEE PERMISSIBLE LOWEST VOLTAGE 9V TO WORK SOLENOID (PULL COIL).
(TERMINAL RESISTANCE :15/1000Q PER COUPLER.
0Q PER SCREW SETTING.
COUPLER RESISTANCE OF SOLENOID DOESN'T NEED TO BE COUNTED)
REFERENCE :AV2 (0.0088Q/m) :≦8.0m···WITHOUT TERMINAL RESISTANCE
AV3 (0.0056Q/m) :≦12.5m···SAME AS ABOVE
WHEN YOU EXCEED PERMISSIBLE RESISTANCE, ADOPT THE CIRCUIT IMPRESSED FROM THE POWER SUPPLY TO THE SOLENOID DIRECTLY USING A RELAY ···REFER TO #
2. HIGH TEMPERATURE PARTS, SUCH AS AN EXHAUST PIPE, SHOULD NOT APPROACH FOR THE PULL POWER FALL OF SOLENOID, AND HEATING PREVENTION OF INNER COIL TEMPERATURE. (PERMISSIBLE AMBIENT TEMPERATURE:-30~100℃)
3. INSTALL FUSE TO PROTECT THE HARNESS AGAINST TROUBLES SUCH AS SHORT CIRCUIT OR CONTINUOUS DRIVE OF PULL-COIL.
4. THE POWER SUPPLY OF SOLENOID MAY NOT BE COMMON WITH THE LINE OF ALTERNATOR INITIAL EXCITATOR AS SHOWN IN THIS DRAWING. (OTHERWISE, SOLENOID MAY LOOSE STOP FUNCTION DUE TO THE POWER SUPPLY FROM ALTERNATOR "L" TERMINAL.)
5. IN CASE OF WATERPROOF CONNECT OR APPLICATION, CONNECTOR SHOULD BE FIXED BY FITTING TO PREVENT LEAD WIRE BREAK.
6. IN CASE OF EMARGENCY STOP OF MACHINE FOR SAFETY WILL BE APPLIED, SWITCH LOCATION SHOULD BE SHOWN AS A.
7. IN CASE OF THE SOLENOID CIRCUIT RESISTANCE WOULD BE LIMIT, # WIRING IS APPLICABLE.

With respect to the use of environmentally hazardous substances for the parts, the substances in use shall conform to the requirement specified in YIS Y-0001J, "Restrictions of use for Environmentally Hazardous Substances".

本部品への環境有害物質の使用に関しては YIS Y-0001J（環境負荷物質の使用規制）の規定を満足すること。

重要ポイント		
精度／種類	記号	
種類	記号	
形状公差	真直度	—
	真円度	○
	線形	⌒
	平面度	▱
	円筒度	⌭
	面形	⌓
姿勢公差	平行度	//
	直角度	⊥
	傾斜度	∠
位置公差	位置度	⌖
	同軸度	◎
	対称度	⌯
振れ公差	円筒振れ	↗
	全振れ公差	⌰

素材質量 WEIGHT (RAW)	(± %)	水圧試験 HYDRAULIC TEST	MPa (kg/cm²)	小形工開発部	部長 G. MANAGER	技部長 MANAGER
完成質量 WEIGHT (精度%)	(± %)	空圧試験 PNEUMATIC TEST	MPa (kg/cm²)			
主席	長 SEC. MANAGER	機種 MODEL	3TNV70	3TNV74F	3TNV76	3TNV80F	3TNM74F	尺度 SCALE	SCALE OUT
検図 CHECKED	機能担当者 SPECIALIST	個数 QTY.						材質 MATERIAL	
設計 DESIGNED I. Taguchi	製図 DRAWN R. Nakagawa	年月日 DATE 2017 11.7	名称 NAME	ケッセンス" WIRING DIAGRAM WIRING DIGLAM					

YANMAR CO., LTD.
POWER SYSTEM OPERATIONS DIV.

コード CODE F3-19F11-0010 | 図面サイズ A2 (C)

NEED ○	PURCHASING SPECIFICATION	REQUEST FOR APPROVAL	DELIVERY DRAWING	INSPECTING STANDARD	QC-PROCESS

FILE NAME:Z3-19717-0030.DRW

3RD ANGLE PROJECTION

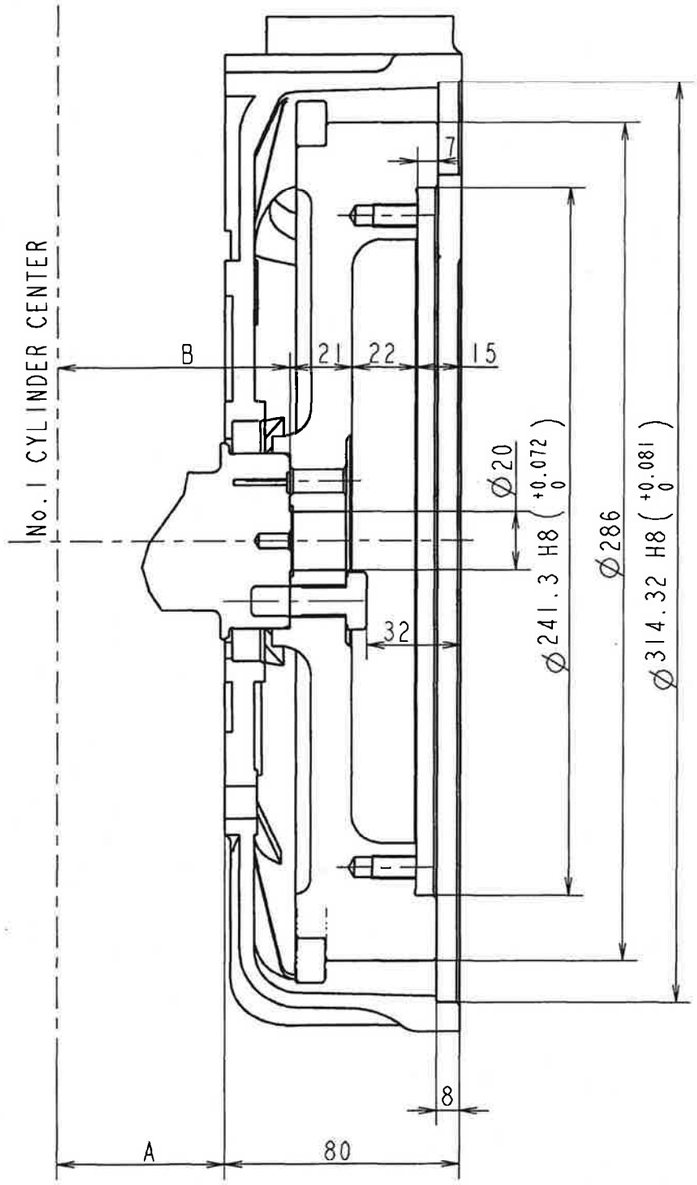

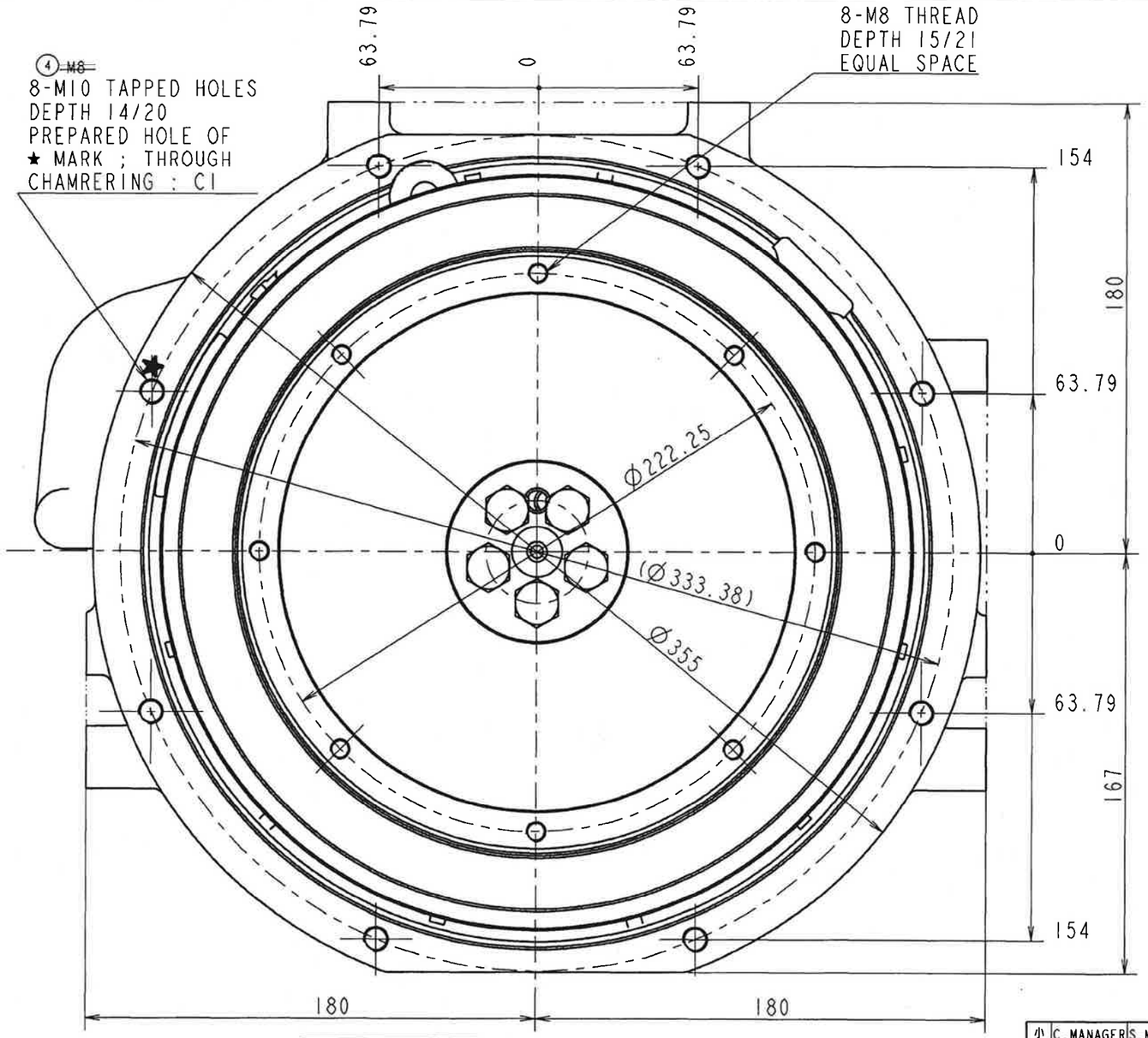

本部品への環境負荷物質の使用に関しては、YIS V-0001J（環境負荷物質の使用規制）の規格を満足すること。

With respect to the use of environmentally hazardous substances for the parts, the substances in use shall conform to the requirement specified in YIS V-0001J, "Restrictions of use for Environmentally Hazardous Substances".

3D-CAD

NOTICE	GEOMETRICAL TOLERANCE	KIND OF TOLERANCE	SYMBOL
FORM		STRAIGHTNESS TOLERANCE	—
		CIRCULARITY TOLERANCE	○
		PROFILE OF LINE TOLERANCE	⌒
		FLATNESS TOLERANCE	▱
		CYLINDRICITY TOLERANCE	⌭
		PROFILE TOLERANCE OF SURFACE	⌓
ORIENTATION		PARALLELISM TOLERANCE	//
		PERPENDICULARITY TOLERANCE	⊥
		ANGULARITY TOLERANCE	∠
LOCATION		POSITIONAL TOLERANCE	⌖
		COAXILITY OF CONCENTRICITY TOLERANCE	◎
		SYMMETRY TOLERANCE	⌯
RUN-OUT		CIRCURAR RUN-OUT TOLERANCE	↗
		TOTAL RUN-OUT TOLERANCE	⌰

	MODEL	DIMENSION A	DIMENSION B	FLYWHEEL HOUSING	FLYWHEEL CMP	FLYWHEEL
③	3TNV70	54	76	↓	↓	↓
	3TNV76	57	79	② ~~0~~ 119717-01601	① ~~119636-21580~~ 119636-21590	119636-21410
③	3TNV74F	54	76	↑	119E00-21580	119E00-21400
③	3TNV80F	57	79	↑	↑	↑

WEIGHT (RAW)	kg (± g)
WEIGHT (CALC.)	0.000kg (± g)
S.ENGINEER	MANAGER D.Kajita
CHECKED M.Yamada	SPECIALIST
DESIGNED S.Taguchi	DRAWN M.Wakigaka
DATE:Y.M.D 2002.30.JAN	

CAREER
Rev.1(2004.7.9)
Correct parts number (YDSTX-04086)
Rev2(2007.2.2)Renew the number of Flywhhl Housing (YDSTX-07009)
Rev.3(2013.4.25)Add 3TNV70,3TNV74F, 3TNV80F (YDSTX-13014)
Rev.4(2016.1.13)Correct bolt size. (YDSTX-16008)

MODEL	3TNV 70	3TNV 76	3TNV 74F	3TNV 80F		
QTY	1	1	1	1		

NAME: チョッケツフ゛ショウサイス゛
COUPLING SEMI SAE #5

SCALE 1:2
MATERIAL

小形工開発部 C.MANAGER S.MANAGER

YANMAR
POWER SYSTEM OPERATIONS DIV., YANMAR CO., LTD.

CODE: Z3-19717-0030
Rev.1 Rev.2 Rev.3 Rev.4
DRAW SIZE A3

Fig. 3TNV76-XCYI2 Engine performance curve 3200 min^{-1}

n-BxS:3-76x82

Displacement : 1,116cc

Rated power (Gross)

18.5 kW / 3200 min-1

Silencer			Crank pulley	D=110
Air cleaner			Fan puley	D=100
CW fan	none		φ-	-

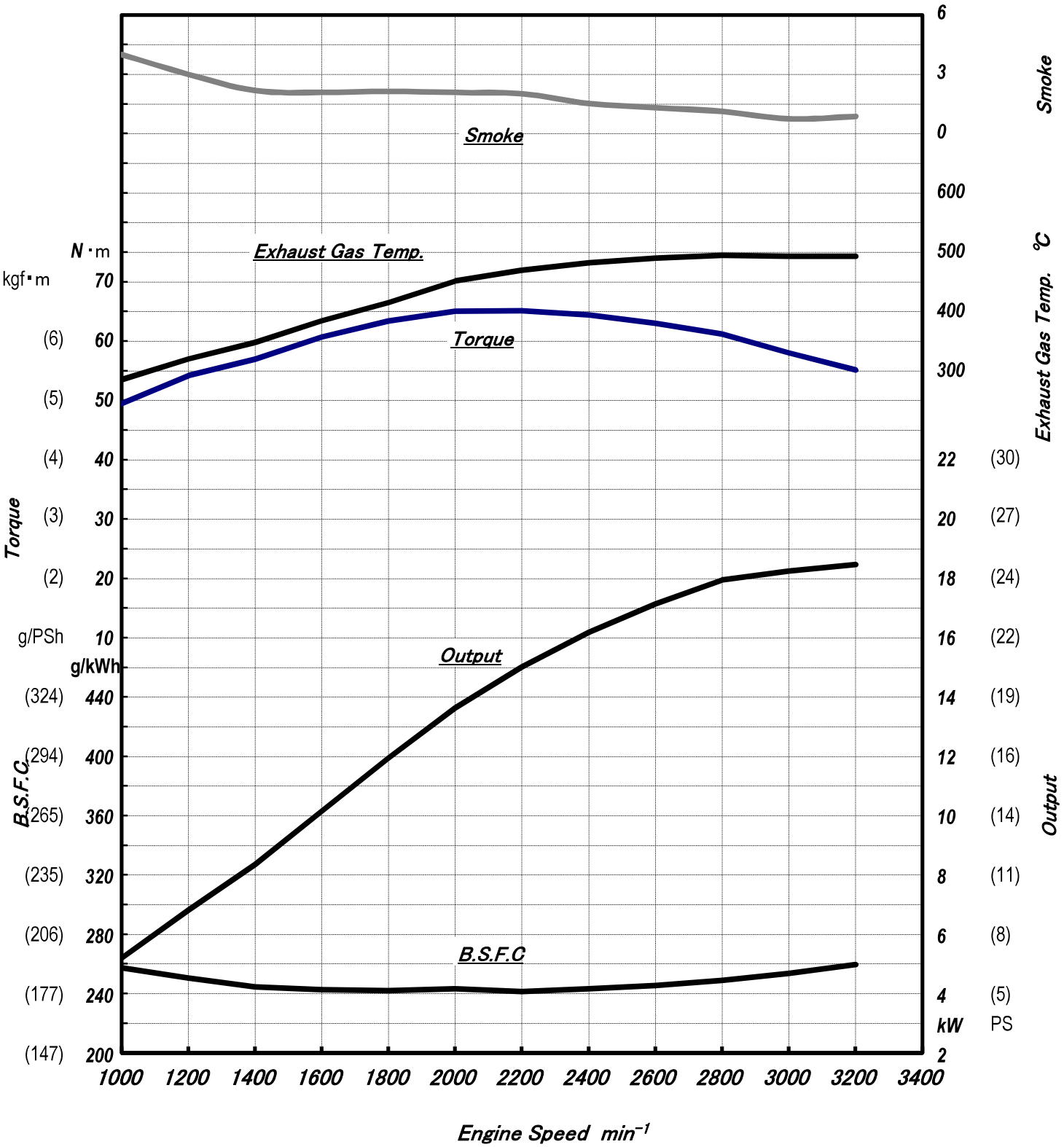

SCOPE OF SUPPLY

G3-19715-0120

No	ENGINE MODEL	3TNV76-XCYI2D	Parts number	Remarks
FUEL SYSTEM				
1	Fuel Injection Pump	installed	719715-51330	Mark HRP4
2	Fuel Injection Nozzle	installed	119515-53001	Mark C
3	Fuel Transfer Pump	installed	129100-52101	Mechanical type
4	Fuel Filter	installed	119833-55630	
5	Fuel Injection Line	installed	119746-59800	For 3TNV76 CH/VH specification
6	Fuel Line (Filter to Pump)	installed	129210-59080	L=270mm
7	Fuel (Pump to Filter)	installed	129210-59170	L=440mm
8	Water Separator	provided	129335-55750	loose part
9	Speed control lever	installed	119515-61440	
LUB,OIL SYSTEM				
10	Oil Pan	installed	119717-01770	Shallow type / Drain : intake side
11	Extension(oil filler	Not Provided		
12	Breather Pipe	Not Provided		closed type (internal piping)
13	Sender ,lub .oil pressure	Not Provided		
14	Switch ,lub .oil pressure	installed	114250-39450	PIN_TYPE
15	Dipstick	option part	See option parts list	Standard : Stick type
16	Guide ,dipstick	option part	See option parts list	Standard : For stick type
17	Oil filter	installed	119305-35160	
18	Oil cooler	Not Provided		
COOLING SYSTEM				
19	Radiator	option part	See option parts list	Standard : without radiator
20	Rubber Isolaters	option part	See option parts list	Standard : without rubber isolator
21	Pipe A,radiator	option part	See option parts list	Standard : without pipe A for radiator
22	Pipe B,radiator	option part	See option parts list	Standard : without pipe B for radiator
23	Hose Clamp 38	option part	See option parts list	Standard : without hose clamp 38
24	Sub tank(radiator)	option part	See option parts list	Standard : without sub tank
25	Water Pump	installed	119E10-42001	76_Low position type
26	Cooling Fan	option part	See option parts list	Standard : 7x dia.335 PULL (ID : YC)
27	Spacer ,fan	option part	See option parts list	Standard : T=30
28	Guide ,fan	option part	See option parts list	Standard : without guide for fan
29	Pulley ,fan	option part	See option parts list	Standard : D100
30	V-Belt	option part	See option parts list	Standard : 37inch
31	Switch, water temp.	installed	121250-44901	110°C+PLUG SWITCH INT SIDE
32	Sender, water temp.	Not Provided		
33	Thermostat	installed	119717-49800	71°C
34	Thermostat Cover	option part	See option parts list	Standard : Upward type If customer select lateral type, we supply it at loose part. Customer need to replace from urward type to lateral type by themselves.
35	Water Drain Fitting	installed	171056-49120	PLUG
36	3-Way Plug ,cooling water	Not Provided		

SCOPE OF SUPPLY

G3-19715-0120

No	ENGINE MODEL	3TNV76-XCYI2D	Parts number	Remarks
ELECTRIC SYSTEM				
37	Starter	installed	119717-77010	12V-1.1kW_Denso
38	Alternator	option part	See option parts list	Standard : DENSO 40A P-terminal
39	Connector for Alternator	option part	See option parts list	Standard : without connector
40	Relay ,solenoid	provided	119650-77911	For solenoid (loose part)
41	Timer ,solenoid	provided	129211-77920	For solenoid (1sec.) (loose part)
42	Engine Shut Off	installed	129630-77910	STD Coupler
43	Glow plug	installed	119717-77801	super quick type(4s)
44	Diode ,solenoid relay	provided	119643-66900	600V/1.1A (loose part)
45	Timer ,air heater(grow)	Not Provided		
46	Current limitter	Not Provided		
47	Safety relay ,starter	Not Provided		
48	relay (12V-80A)	option part	See option parts list	Standard : without Relay
PTO SYSTEM				
49	Flywheel Housing or Back plate	installed	119717-01601	SAE#5 T=80
50	Flywheel	installed	119636-21590	SAE#5 (PC dia.222,3)
51	Bearing ,retainer	Not Provided		
52	Pulley ,crankshaft	installed	119717-21650	D110
53	Flange ,gear case	installed	119742-01500	76_WITH_SAE_HO-P
54	Cover ,gear case	installed	119740-01521	76_WITH_SAE_HO-P
55	Hydraulic Pump	Not Provided		
56	Device ,hydraulic pump	installed	119744-26000	SAE9T, 20/40 DP
INTAKE/EXHAUST SYSTEM				
57	Air Cleaner	option part	See option parts list	Standard : without Air cleaner
58	Bracket ,air cleaner	option part	See option parts list	Standard : without Bracket for Air cleaner
59	Clamp ,air cleaner hose	option part	See option parts list	Standard : without Clamp for Air cleaner hose
60	Manifold ,intake	installed	119717-11381	
61	Joint	Not Provided		
62	Resonator	option part	See option parts list	Standard : without Resonator
63	Silencer	option part	See option parts list	Standard : without Silencer
64	Clamp(tail pipe	Not Provided		
65	Gasket ,silencer	provided	119515-13200	loose part
66	Manifold ,exhaust	option part	See option parts list	standard : Upward with silencer support
67	Bend ,exhaust	Not Provided		
68	Turbine	Not Provided		
GAUGE				
69	Drive Unit ,tachometer	Not Provided		
70	Cable ,tachometer	Not Provided		
71	Tachometer	Not Provided		
72	Key Switch	Not Provided		
73	Cover ,terminals	Not Provided		
74	Pilot lamp	Not Provided		
75	Guage ,oil/water temp	Not Provided		

SCOPE OF SUPPLY

G3-19715-0120

No	ENGINE MODEL	3TNV76-XCYI2D	Parts number	Remarks
76	Guage ,oil pressure	Not Provided		
OTHERS				
77	Filter Wrench ,lub .oil	Not Provided		
78	Filter Wrench ,fuel .oil	Not Provided		

Option parts list for 3TNV76-XCYI2D

G3-19715-0230

1) Cooling fan

	Standard
Specification	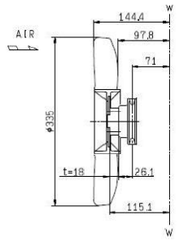
	Dia 335mm puller(YC) fan spacer 30mm
3TNV76-XCYI2D	●

Parts name	Parts number	QTY
D-code	D19717-44410	1
Fan	119717-44740	1
Fan spacer	129457-44760	1
Bolt	26106-060452	4

2) Fan pulley

	Option A
Specification	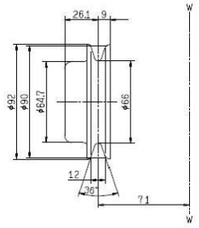
	Dia 90mm
3TNV76-XCYI2D	●

Parts name	Parts number	QTY
D-code	D19717-42320	1
Fan pulley	119740-42350	1
Fan belt	119865-42290 (36.5nch)	1

3) Alternator

Specification	
3TNV76-XCYI2D	

Parts name
D-code
Alternator
Spacer for alternator
Bolt for alternator(upper side)
Nut for alternator

4) Connector for alternator

	Standard
Specification	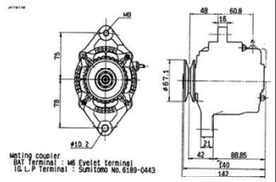
	DC12V-55A with P terminal (Denso)
	●

Parts number	QTY
D19515-77220	1
119626-77220	1
124732-77340	1
129972-77341	1
26306-100002	1

	Option A
Specification	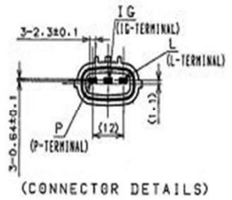
	SUMITOMO 6189-0442 for alternator (Denso)
3TNV76-XCYI2D	●

Parts name	Parts number	QTY
D-code	D19515-77350	1
Housing	119515-77900	1
Wire seal	119515-77910	3
Terminal	119515-77920	3

Option parts list for 3TNV76-XCYI2D

G3-19715-0230

5) Radiator

	Standard		Option B		Option C	
Specification	Not provided		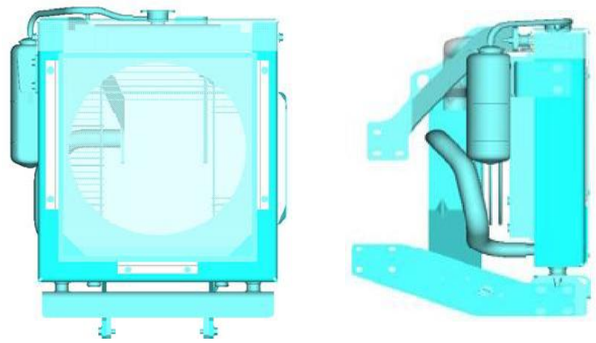		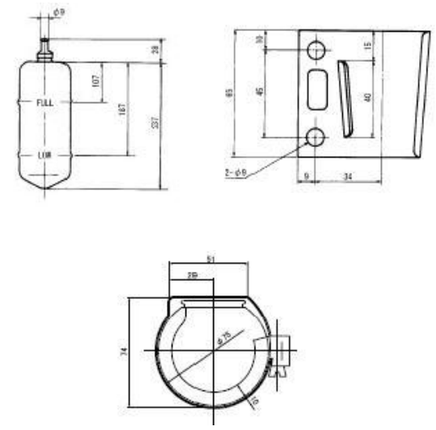	
	Not provided		To be installed on the engine		Sub Tank ASY (Provided as loose parts)	
3TNV76-XCYI2D	●		●		●	
Parts name	Parts number		Parts number	QTY	Parts number	QTY
D-code			D19717-44100	1	D29405-44500	1
Radiator	-		-	-	-	-
Fan guard	-		-	-	-	-
Upper hose	-		-	-	-	-
Lower Hose	-		-	-	-	-
Rubber mount	-		-	-	-	-
Sub tank	-		-	-	124450-44510	1
Sub tank bracket	-		-	-	121256-44600	1
Sub tank band	-		-	-	124450-44550	1
Label,YANMAR	-		129247-07000	1	-	-
Label,RADIATOR	-		129946-07000	1	-	-
Cover,V-belt	-	-	119746-42810	1	-	-
Radiator CMP	-	-	119746-44510	1	-	-
Sub Tank ASSY	-	-	124450-44510	1	-	-
Clamp, Sub Tank	-	-	124450-44550	1	-	-
Guard, Fan	-	-	119802-44560	1	-	-
Bracket, Sub Tank	-	-	121256-44600	1	-	-
Rubber, Cushion	-	-	121400-44640	2	-	-
Bracket, Sub Tank	-	-	129946-44900	1	-	-
Stay A, Radiator	-	-	119746-44910	1	-	-
Stay B, Radiator	-	-	119746-44921	1	-	-
Bracket, A Radiator	-	-	119746-44950	2	-	-
CW-T (A	-	-	119802-49010	1	-	-
CW-T (B	-	-	119802-49020	1	-	-
Valve ASSY, Drain	-	-	129550-49101	1	-	-
Pipe, Water Drain	-	-	124579-49160	1	-	-
Pipe ASSY, Drain	-	-	129210-49320	1	-	-
Clamp, Hose 12	-	-	124766-59050	2	-	-
Clamp, Hose 35	-	-	23000-035000	4	-	-
Clamp, 12 X 8	-	-	23297-120081	1	-	-
Bolt, M6 X 16	-	-	26106-060162	8	-	-
Bolt, M8 X 12	-	-	26106-080122	1	-	-
Bolt, M8 X 16	-	-	26106-080162	9	-	-
Bolt, M8 X 20	-	-	26106-080202	8	-	-
Bolt, M10X20	-	-	26106-100202	8	-	-
Nut, M8	-	-	26306-080002	2	-	-

Option parts list for 3TNV76-XCYI2D

6) Air cleaner

	Standard		Option A	
Specification			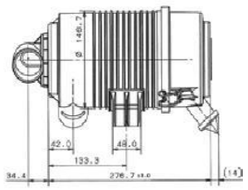	
	not provided		5 inch Single element (Provided as loose parts)	
3TNV76-XCYI2D	●		•	
Parts name	Parts number	QTY	Parts number	
D-code	-	-	D19515-12610	1
Air cleaner	-	-	119746-12510	1

7) Exhaust System

	Option A	
Specification	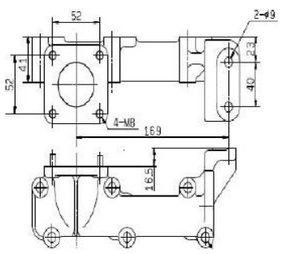	
	Upward manifold (rear bracket)	
3TNV76-XCYI2D	●	
Parts name	Parts number	QTY
D-code	D19717-13100	1
Exhaust manifold	119717-13109	1
Gasket (for exhaust manifold)	119717-13110	1
Stud, M8X50	119717-13600	2
Bolt, M8X50	119802-13620	4
Bolt, M8X70	-	-
Stud bolt	119131-18320	4
Nut, M8	26306-080002	2
Silencer	-	-
Gasket, Silencer	-	-
Bolt, M8X25	-	-
Nut, M8	-	-

Remark : Exhaust system option has to be selected.

10) Thermostat cover

	Standard
Specification	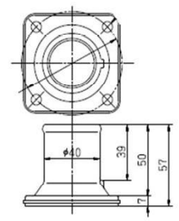
	Upward (installed on the engine)
4TNV86CHT-MYI2D	●

Parts name	Parts number	QTY
D-code	D19717-49200	1
Thermostat cover	129350-49530	1
Thermostat	119717-49800	1
GASKET	-	-
Bolt (M8X20)	26106-080202	2
Bolt (M8X25)	-	-
Bolt (M8X65)	-	-

Remark : If radiator option (A and B) is selected, thermostat cover option cannot be selected.
(Lateral thermostat cover is not fit for upper radiator hose which is provided as radiator option)
If customer select lateral type, please assemble it by themselves after removing standard upward type.
Therefore we supply lateral type as loose parts for customer.

Option D
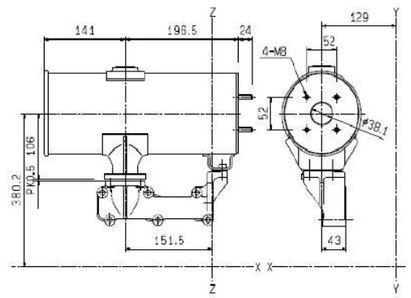
With silencer (Flywheel side outlet on EXH manifold)
●

Parts number	QTY
D19515-13150	1
119717-13109	1
119717-13110	1
119717-13600	2
119802-13620	4
-	-
119131-18320	4
26306-080002	2
119717-13500	1
119515-13200	1
26106-080252	2
26306-080002	4

11) Engine Foot

	Option A
Specification	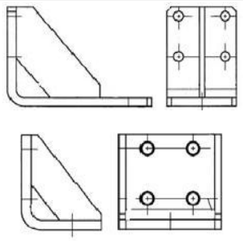
3TNV76-XCYI2D	●

Parts name	Parts number	QTY
D-code	D19546-08100	1
Engine Foot A	119746-08100	2
Engine Foot B	119888-08110	2
BOLT, 10 X 20	26106-100202	8
BOLT, 10 X 30	26106-100302	8

12) Tail Pipe

	Option A
Specification	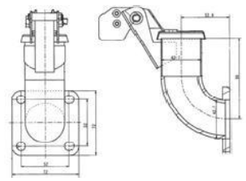
3TNV76-XCYI2D	●

Parts name	Parts number	QTY
D-code	D19546-13600	1
GASKET, SILENCER	119515-13200	1
PIPE ASSY, TAIL	129005-13600	1
NUT, 8	26306-080002	4

13) Dipstick

	Option A
Specification	
3TNV76-XCYI2D	●

Parts name	Parts name	QTY
D-code	D19717-34100	1
DIPSTICK, LUB OIL	119717-34801	1
GUIDE, DIPSTICK	121520-34810	1
GUIDE, DIPSTICK	---	
*(PACKING, P 10A	---	
BOLT, 8 X14	---	

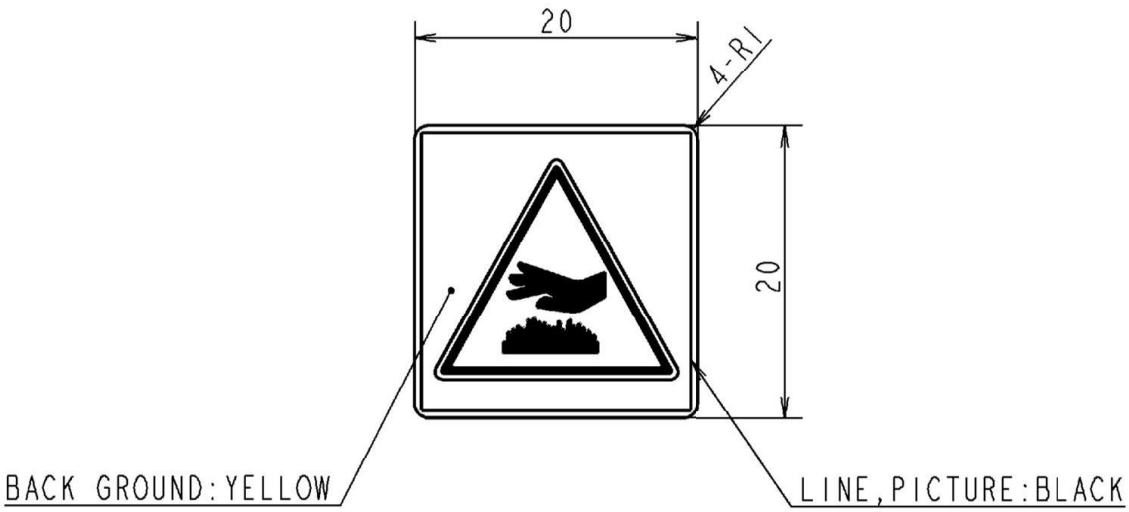

REMARKS(注記)
1.MATERIAL(材質):POLYETHYLENE TEREPHTHALATE(POLYESTER)
2.THICKNESS OF TOP SHEET(厚サ):0.07(POLYESTER SHEET:0.05
LAMINATED SHEET:0.02)
3.SHALL BE LAMINATED ON TOP SIDE(ラミネート処理ノコト)
4.THE ADHESIVE SHALL BE COATED ON BACK SIDE
(裏面ニ接着剤、ダブルフェース剤塗布ノコト)
5.BACK SHEET SHALL BE CUT ON THE CENTER(裏紙背割付ノコト)

SCALE	FREE	3RD ANGLE PROJECTION	YANMAR CO., LTD	
素材 MATERIAL		PET	部品名称 PART NAME	ラベル（ホットサーフェス LABEL, HOT SURFECE
質量 WEIGHT		0 kg		
機種名称 MODEL NAME			部品コード PART CODE	REV. 114220-07130

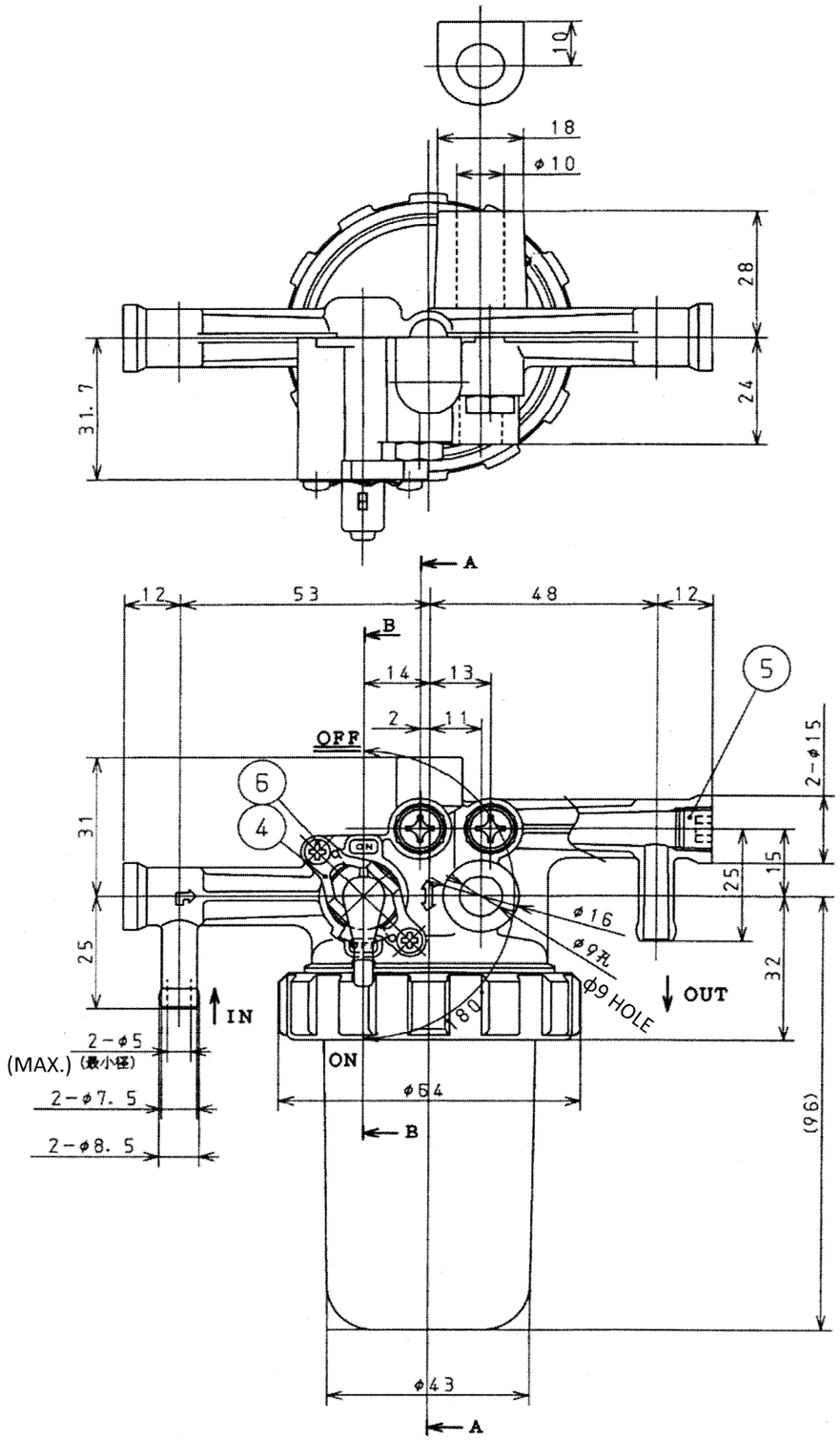

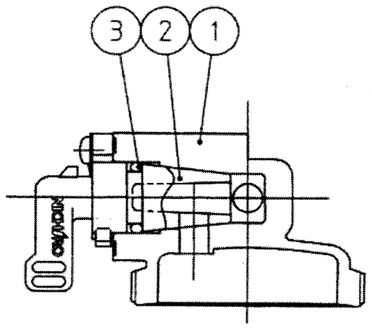

断面 B−B
SECTION B-B

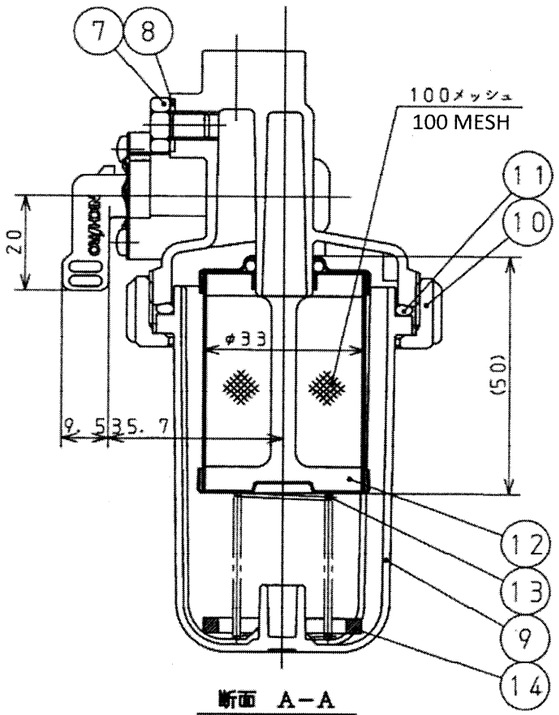

断面 A−A
SECTION A-A

仕様 SPECIFICATION		
項目 ITEM	条件 CONDITION	規格 STANDARD
外部気密 EXTERNAL AIRTIGHT	空圧 100 kPa AIR PRESSURE	漏れなきこと（1 min） NO LEAKAGE
バルブOFF性能 VALVE OFF PERFORMANCE	空圧 50 kPa	1 mL/min以下 1 mL/min MAX
レバー作動トルク LEVER OPERATING TORQUE	2〜3 回作動後 AFTER A FEW OP	0.2〜0.7 N・m
適応燃料 ADAPTIVE FUEL		軽油、ヤンマー重油 DIESEL OIL、YANMAR HEAVY OIL
適応温度範囲 ADAPTIVE TEMPERATURE		-20°C〜80°C

注 記

1. ⑩リングナット締付トルク：12^{+3}_{0} N・m
2. ⑦エアプラグ締付トルク： $2^{+1}_{0.5}$ N・m
3. 取付時のボルト締付トルク： 25〜27 N・m

NOTES

1.⑩TIGHTENING TORQUE OF RING NUT
2.⑦TIGHTENING TORQUE OF AIR PLUG
3.TIGHTENING TORQUE OF BOLT FOR INSTALLATION

素材 MATERIAL	PURCHASE	部品名称 PART NAME	セパレータCMP（ウォータ SEPARATOR ASSY, WATER
質量 WEIGHT	kg		
SCALE FREE	機種名称 MODEL NAME	部品コード PART CODE	REV. 1
3RD ANGLE PROJECTION			129335-55750

YANMAR CO., LTD